# ELm 60®

## Peripheral impeller pump

Clean water

Domestic use

※ **The ELm 60® a cornerstone since 1974, an integral part of our future.**



※ **50 years of success since 1974**
※ **Produced over 23 million units**
※ **Made from premium materials and components**
※ **Our most economical and versatile product**
※ **Noise level reduced by20 %**
※ **Exclusively produced with renewable energy sources**

### PERFORMANCE RANGE

- Flow rate up to **40 l/min** (2.4 m³/h)
- Head up to **40 m**

### INSTALLATION AND USE

Designed to transfer clean water free from abrasive particles and liquids that will not damage the pump's components.
Reliable, easy to operate, and cost-effective. It is ideal for domestic applications, specifically for gardens and orchards, in combination with small autoclave tanks.

### APPLICATION LIMITS

- Manometric suction head up to **8 m**
- Liquid temperature between **-10 °C** and **+60 °C**
- Ambient temperature up to **+50 °C**
- Maximum working pressure **6 bar**

### PATENTS - TRADE MARKS - MODELS

- Motor bracket: Patent No. IT1243605
- Pump body: Patent No. 0000275946
- Registered community model No. 018625876
- International registered model No. DM/220613
- ELm 60® Registered Trade mark No. 009875394

### AVAILABLE UPON REQUEST

※ Different voltage or frequency

## CURVES AND PERFORMANCE DATA – HS=0 m

**60 Hz**

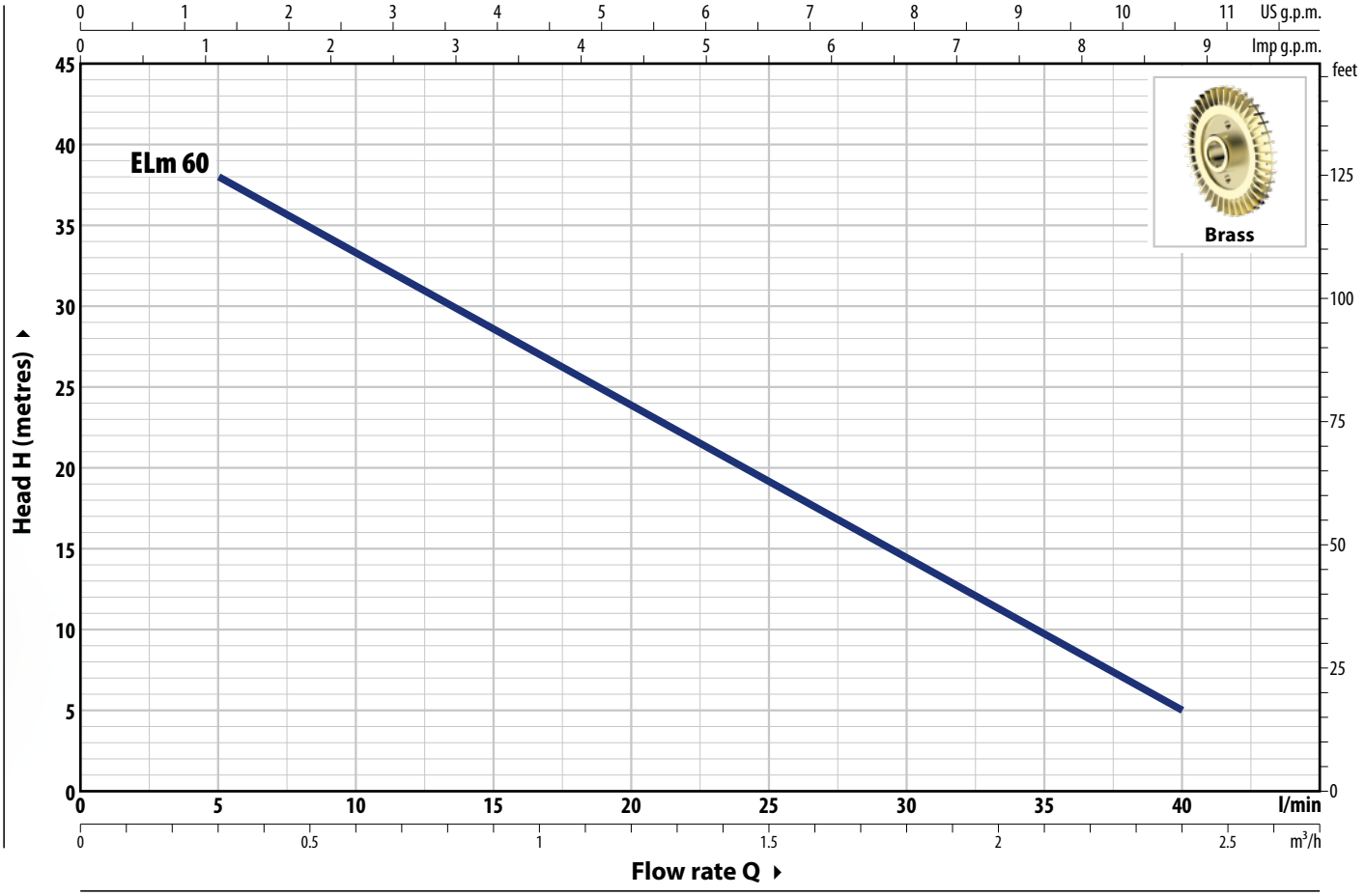


| TYPE | | POWER (P2) | | | Q | m³/h | 0 | 0.3 | 0.6 | 0.9 | 1.2 | 1.5 | 1.8 | 2.1 | 2.4 |
|---|---|---|---|---|---|---|---|---|---|---|---|---|---|---|---|
| Single-ph. | Three-ph. | kW | HP | 3~ | | l/min | **0** | **5** | **10** | **15** | **20** | **25** | **30** | **35** | **40** |
| **ELm 60** | **PK 60** | 0.37 | 0.50 | **IE2** | **H** | m | 40 | 38 | 33.5 | 29 | 24 | 19.5 | 15 | 10 | 5 |

**Q** = Flow rate **H** = Total manometric head **HS** = Suction height

Performance curves comply with EN ISO 9906 Grade 3B tolerance limits.

## ABSORPTION

| TYPE | VOLTAGE | |
|---|---|---|
| Single-ph. | 220 V | 110 V |
| **ELm 60®** | 2.6 A | 5.5 A |

| TYPE | VOLTAGE | | | |
|---|---|---|---|---|
| Three-ph. | 220 V - Δ | 380 V - Y | 220 V - Δ | 440 V - Y |
| **PK 60®** | 2.0 A | 1.15 A | 2.1 A | 1.2 A |

## DIMENSIONS AND WEIGHT

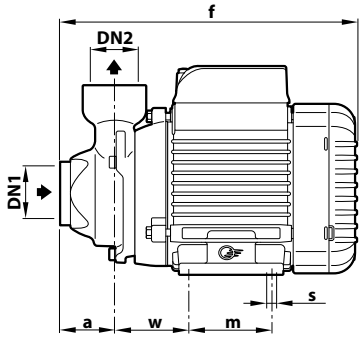


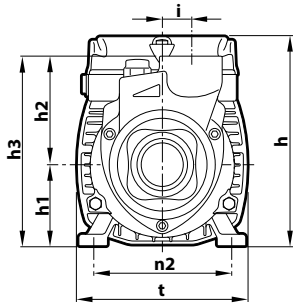


| TYPE | | PORTS | | DIMENSIONS mm | | | | | | | | | | | | kg | |
|---|---|---|---|---|---|---|---|---|---|---|---|---|---|---|---|---|---|
| Single-ph. | Three-ph. | DN1 | DN2 | a | f | h | h1 | h2 | h3 | i | m | t | n2 | w | s | 1~ | 3~ |
| **ELm 60®** | **PK 60®** | **1"** | **1"** | 38 | 208 | 145 | 56 | 75 | 131 | 20 | 55 | 118 | 94-100 | 53 | 7 | 5.0 | 5.0 |

### PALLET CAPACITY

| GROUPAGE | CONTAINER |
|---|---|
| n. pumps | n. pumps |
| 240 | 330 |