ELKm 60® Peripheral impeller pump

Clean water

Domestic use

※ **The ELKm 60® a cornerstone since 1974, an integral part of our future.**



※ **50 years of success since 1974**
※ **Produced over 23 million units**
※ **Made from premium materials and components**
※ **Our most economical and versatile product**
※ **Noise level reduced by20 %**
※ **Exclusively produced with renewable energy sources**

PERFORMANCE RANGE

- Flow rate up to **40 l/min** (2.4 m³/h)
- Head up to **40 m**

INSTALLATION AND USE

Designed to transfer clean water free from abrasive particles and liquids that will not damage the pump's components.
Reliable, easy to operate, and cost-effective. It is ideal for domestic applications, specifically for gardens and orchards, in combination with small autoclave tanks.

ELECTRIC MOTOR

Three-phase pumps feature **IE3**-class electric motors, while single-phase models use **IE2** motors. All are designed with class F insulation and IPX4 protection.

APPLICATION LIMITS

- Manometric suction head up to **8 m**
- Liquid temperature between **-10 °C** and **+60 °C**
- Ambient temperature up to **+50 °C**
- Maximum working pressure **6 bar**

PATENTS - TRADE MARKS - MODELS

- Motor bracket: Patent No. IT1243605
- Pump body: Patent No. 0000275946
- Registered community model No. 018625876
- International registered model No. DM/220613
- ELKm 60® Registered Trade mark No. 009875394

AVAILABLE UPON REQUEST

※ Different voltage requirements 60 Hz frequency

CURVES AND PERFORMANCE DATA – HS=0 m

50 Hz

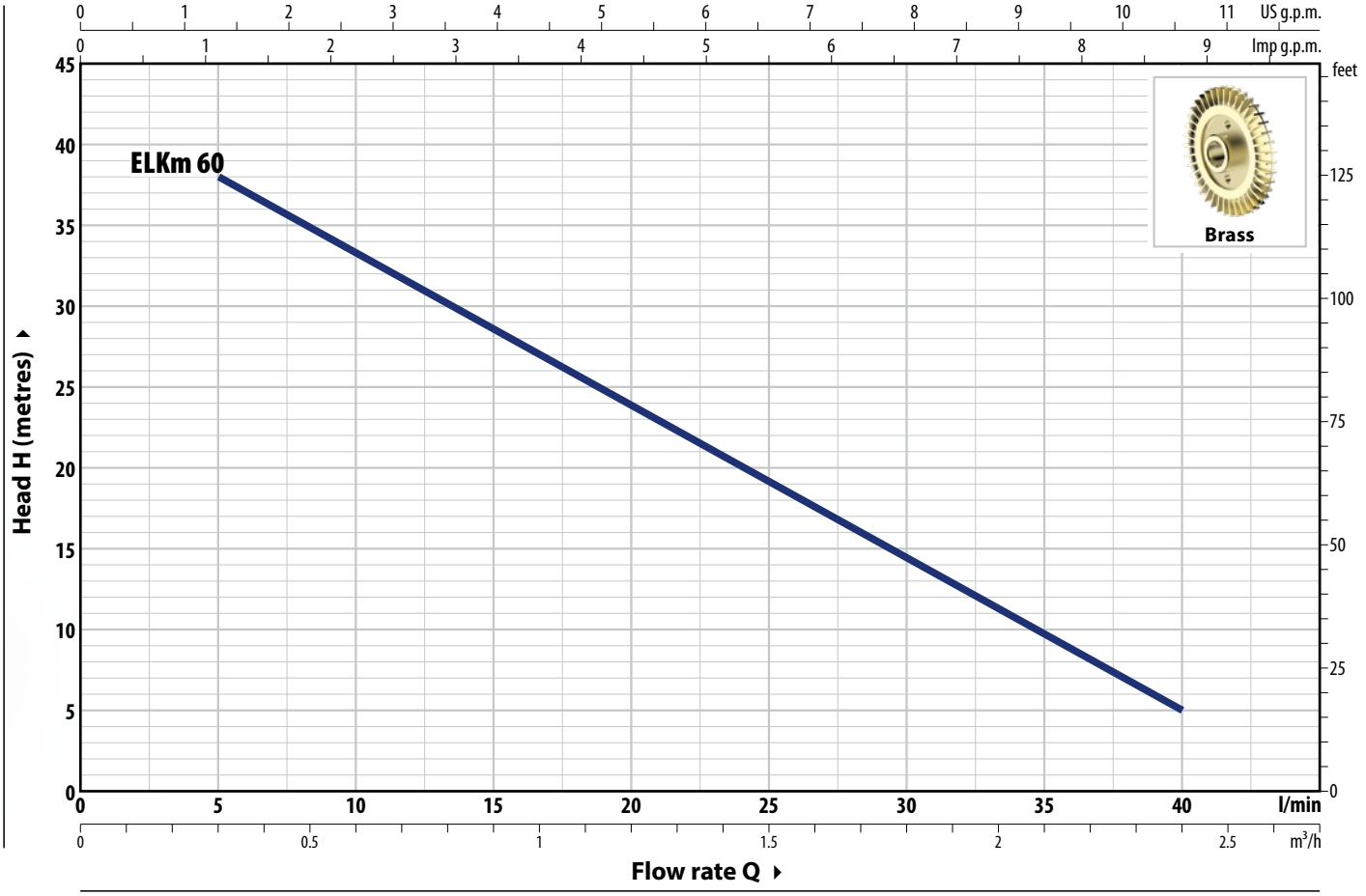

TYPE		POWER (P2)				Q	m³/h	0	0.3	0.6	0.9	1.2	1.5	1.8	2.1	2.4
Single-ph.	**Three-ph.**	**kW**	**HP**	**1~**	**3~**		l/min	**0**	**5**	**10**	**15**	**20**	**25**	**30**	**35**	**40**
ELKm 60	**ELK 60**	0.30	0.40	**IE2**	**IE3**	**H**	metres	40	38	33.5	29	24	19.5	15	10	5

Q = Flow rate **H** = Total manometric head **HS** = Suction height

Performance curves comply with EN ISO 9906 Grade 3B tolerance limits.

ABSORPTION

TYPE	VOLTAGE
Single-phase	**230 V**
ELKm 60®	2.3 A

TYPE	VOLTAGE	
Three-phase	**230 V - Δ**	**400 V - Y**
ELK 60®	2.0 A	1.15 A

DIMENSIONS AND WEIGHT

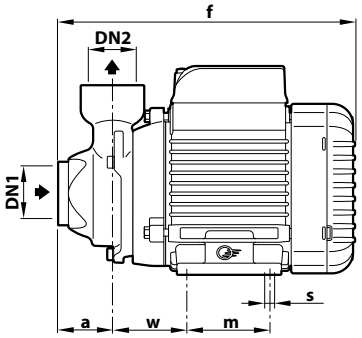

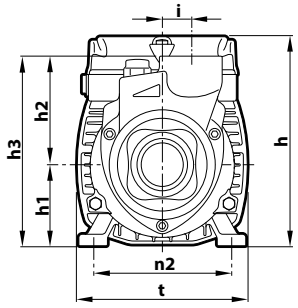

TYPE		PORTS		DIMENSIONS mm												kg	
Single-ph.	**Three-ph.**	**DN1**	**DN2**	a	f	h	h1	h2	h3	i	m	t	n2	w	s	1~	3~
ELKm 60®	**ELK 60®**	**1"**	**1"**	38	208	145	56	75	131	20	55	118	94-100	53	7	5.0	5.0

PALLET CAPACITY
240