CKR Self-priming liquid ring electric pumps



※ With double anti-lock front scraping

Clean water | Domestic use | Industrial use | Agricultural use

PERFORMANCE RANGE

- Flow rate up to **50 l/min** (3 m³/h)
- Head up to **63 m**

INSTALLATION AND USE

Designed for pumping diesel/naphtha and clean water free from abrasive particles and non-corrosive liquids that do not harm the pump's components.

Their specific operating mechanism makes them an excellent solution when a compact self-priming pump is required or when the flow of the liquid is irregular or mixed with air.

APPLICATION LIMITS

- Suction head up to **9 m** (HS)
- Liquid temperature between **-10 °C** and **+90 °C**
- Ambient temperature up to **+40 °C**
- Maximum working pressure **6 bar**

AVAILABLE UPON REQUEST

※ Mechanical seal options available
※ Specific voltages
※ Protection rating: IP 55

PATENTS - TRADE MARKS - MODELS

- Motor bracket: Patent No. IT1243605

CURVES AND PERFORMANCE DATA – HS=0 m

60 Hz

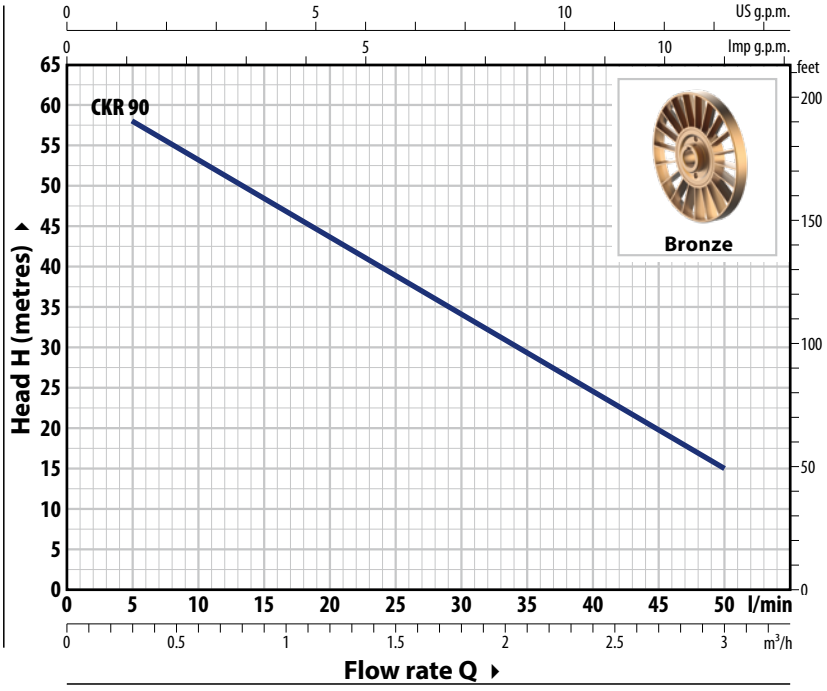

ABSORPTION

TYPE Single-ph.	VOLTAGE 220 V
CKRm 90	5.8 A

TYPE Three-ph.	VOLTAGE 220 V - Δ	380 V - ⅄
CKR 90	4.0 A	2.3 A

TYPE Single-ph.	TYPE Three-ph.	POWER (P2) kW	POWER (P2) HP	3~	Q		0	0,3	0,6	0,9	1,2	1,5	1,8	2,1	2,4	2,7	3
					m³/h		0	0,3	0,6	0,9	1,2	1,5	1,8	2,1	2,4	2,7	3
					l/min		0	5	10	15	20	25	30	35	40	45	50
CKRm 90	CKR 90	0.75	1	IE3	H	m	63	58	53.2	48.4	43.7	38.9	34.1	29.3	24.6	19.8	15

Q = Flow rate **H** = Total manometric head **HS** = Suction height

Performance curves comply with EN ISO 9906 Grade 3B tolerance limits.

DIMENSIONS (mm)

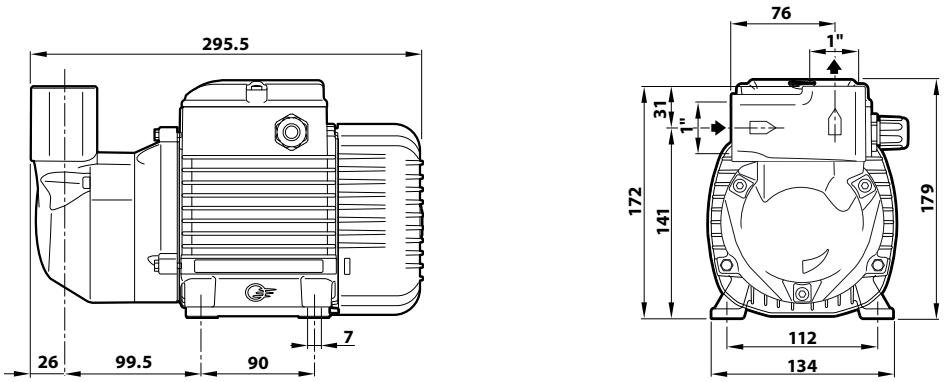

TYPE		PORTS		WEIGHT (kg)		PALLET CAPACITY	
Single-phase	Three-phase	DN1	DN2	1~	3~	GROUPAGE	CONTAINER
CKRm 90	**CKR 90**	**1"**	**1"**	12.0	12.0	102	136

CONSTRUCTION FEATURES

1	**Pump body**	Cast iron, with **stainless-steel** front shaving surface to prevent the impeller from locking due to oxidation. The pump body is equipped with ISO 228/1 threaded ports
2	**Motor bracket**	Aluminium with brass cover with front anti-locking shim function (patented)
3	**Impeller**	Bronze, star-type with open radial vanes
4	**Mechanical seal**	Type: **AR-12V** — Materials: Ceramic / Graphite / Viton
5	**Shaft**	Stainless steel **AISI 431**
6	**Electric motor**	**CKRm**: single-phase 220 V - 60 Hz with winding integrated thermal motor protection **CKR**: three-phase 220/380 V - 60 Hz or 220/440 V - 60 Hz – The three-phase pumps are fitted with high performance motors in class **IE3** (IEC 60034-30-1) – Continuous running duty **S1** – Insulation: class F – Protection rating: IPX4

